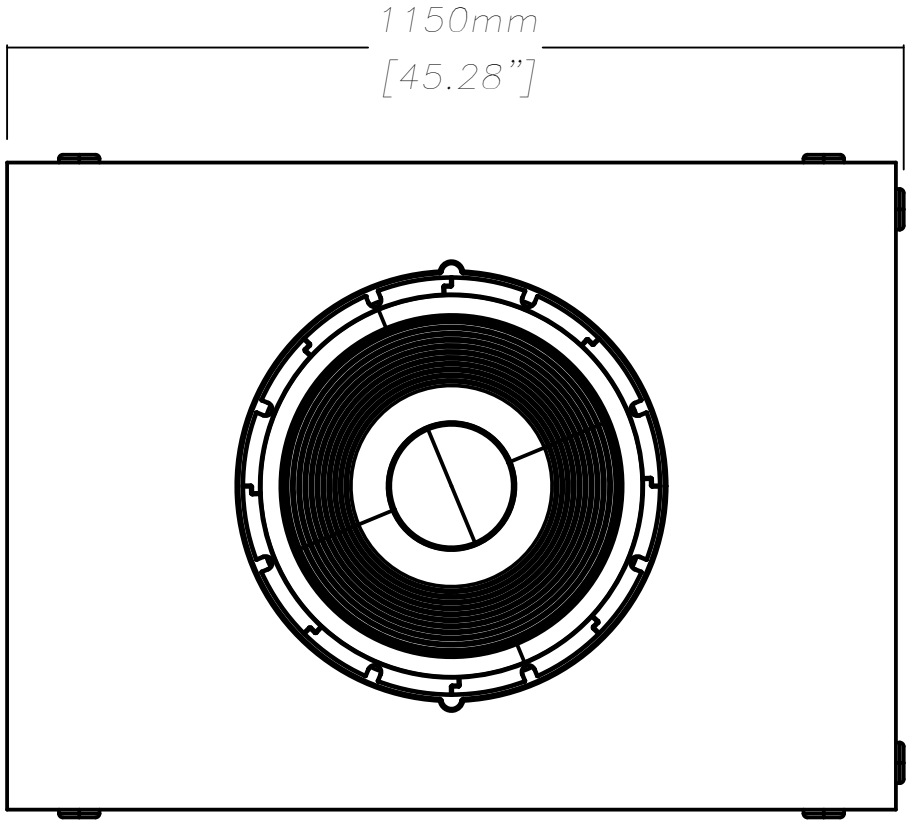
1150mm
[45.28”]

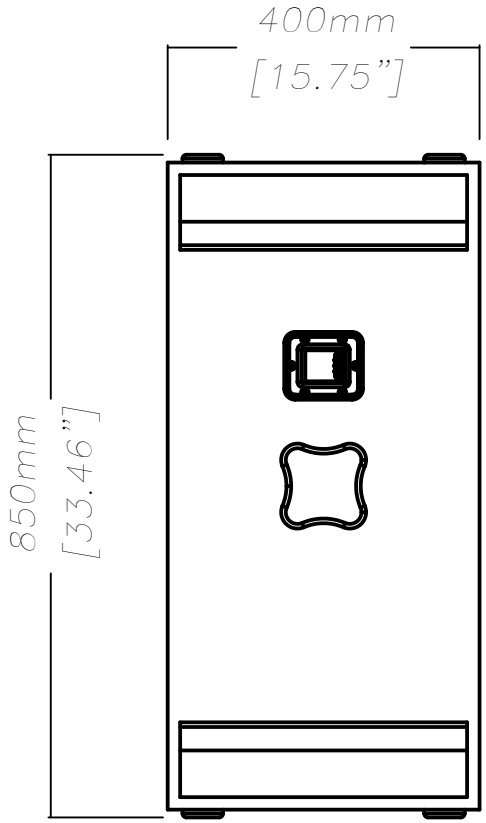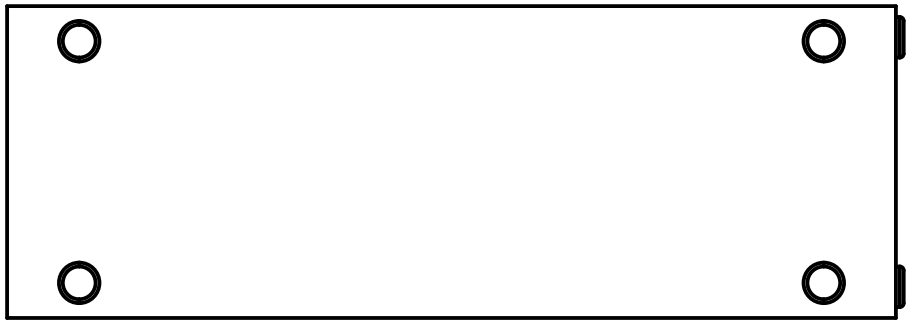
400mm
[15.75”]
850mm
[33.46”]